F.01U.073.052 © Bosch Security Systems 2007
Data subject to change without notice.

Horn Loudspeakers

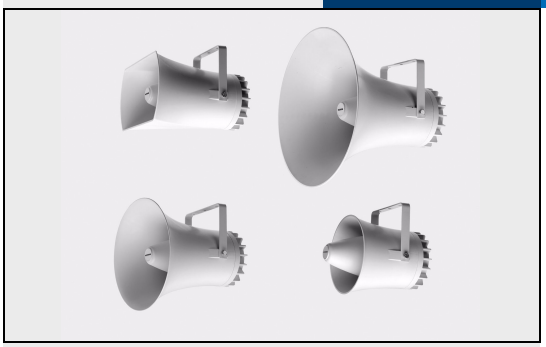

Security Systems

Instructions for use

en

LBC 3403/16
LBC 3404/16
LBC 3405/16
LBC 3406/16

TECHNICAL PERFORMANCE DATA ACC.TO IEC 60268-5

	LBC 3403/16	LBC 3404/16	LBC 3405/16	LBC 3406/16
Sound pressure level				
at rated power/1 W (at 1 kHz, 1 m)				
with driver LBN 9000/00	121/109 dB (SPL)	124/112 dB (SPL)	125/113 dB (SPL)	122/110 dB (SPL)
with driver LBN 9001/00	125/110 dB (SPL)	128/113 dB (SPL)	129/114 dB (SPL)	127/112 dB (SPL)
with driver LBN 9003/00	127/110 dB (SPL)	130/113 dB (SPL)	132/115 dB (SPL)	129/112 dB (SPL)
Effective frequency range (-10 dB)				
with driver LBN 9000/00	400 Hz to 7 kHz	400 Hz to 9 kHz	400 Hz to 9 kHz	350 Hz to 6.5 kHz
with driver LBN 9001/00	350 Hz to 6 kHz	300 Hz to 8.5 kHz	300 Hz to 8 kHz	300 Hz to 8 kHz
with driver LBN 9003/00	380 Hz to 10 kHz	350 Hz to 10 kHz	350 Hz to 9 kHz	380 Hz to 10 kHz
Opening angle (at 1 kHz/4 kHz, -6 dB)	90°/30°	70°/25°	60°/35°	100°/65° (hor/vert) (1 kHz) 65°/30° (hor/vert) (4 kHz)
Ambient temperature range	-25 to +55 °C	-25 to +55 °C	-25 to +55 °C	-25 to +55 °C
Water- and dust protected	acc. to IEC 60529 IP 65	acc. to IEC 60529 IP 65	acc. to IEC 60529 IP 65	acc. to IEC 60529 IP 65
Dimensions				
aperture dia.	255 mm	380 mm	510 mm	390 x 235 mm
overall length	387 mm	422 mm	487 mm	422 mm
Colour	light grey (RAL 7035)	light grey (RAL 7035)	light grey (RAL 7035)	light grey (RAL 7035)
Weight (excl. driver)	2.94 kg	3.34 kg	3.54 kg	3.14 kg

Driver units (ordered separately)

Type	Description	Max./Rated power (PHC)
LBN 9000/00	100 V driver	22.5/15 W
LBN 9001/00	100 V driver	45/30 W
LBN 9003/00	100 V driver	75/50 W

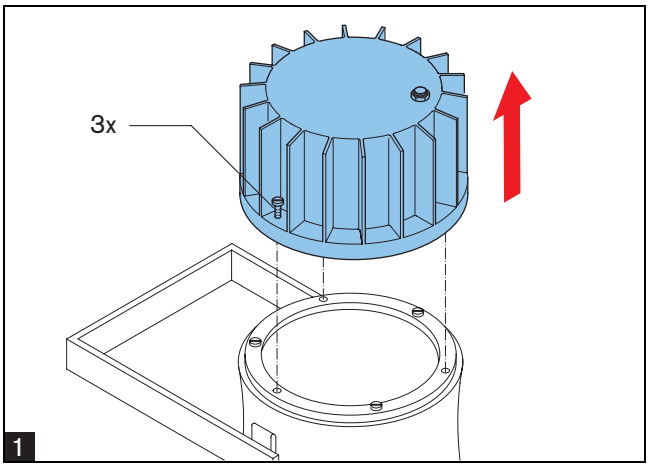
3x
1

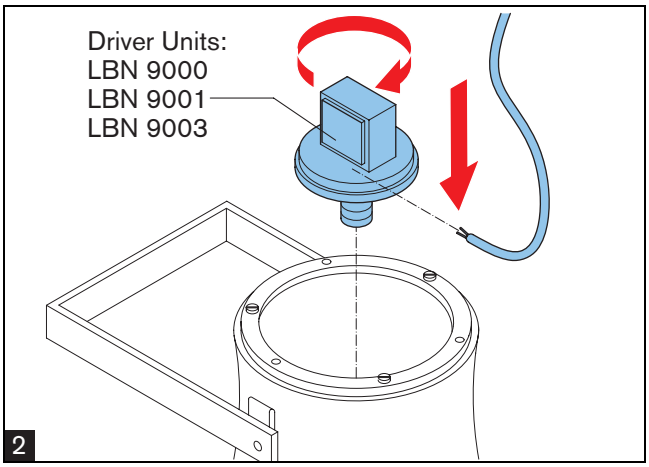
Driver Units:
LBN 9000
LBN 9001
LBN 9003
2

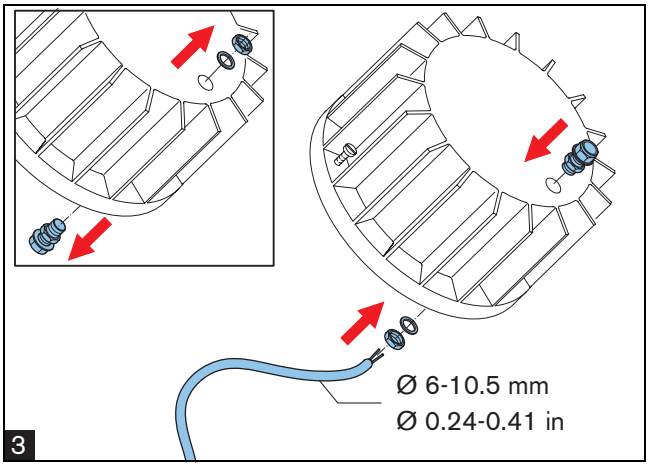
Ø 6-10.5 mm
Ø 0.24-0.41 in
3

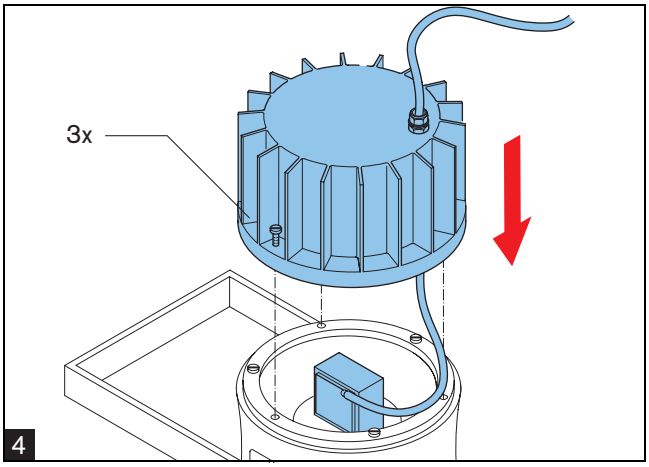
3x
4

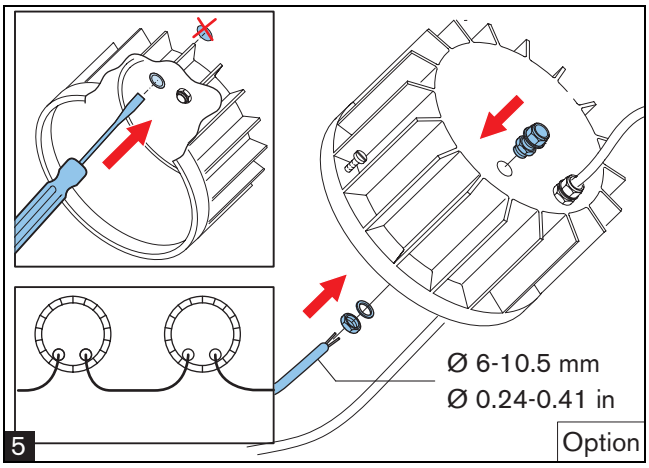
Ø 6-10.5 mm
Ø 0.24-0.41 in
5
Option

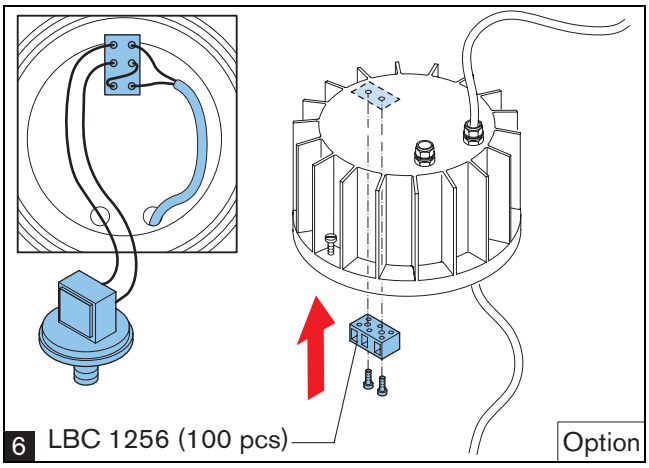
6
LBC 1256 (100 pcs)
Option

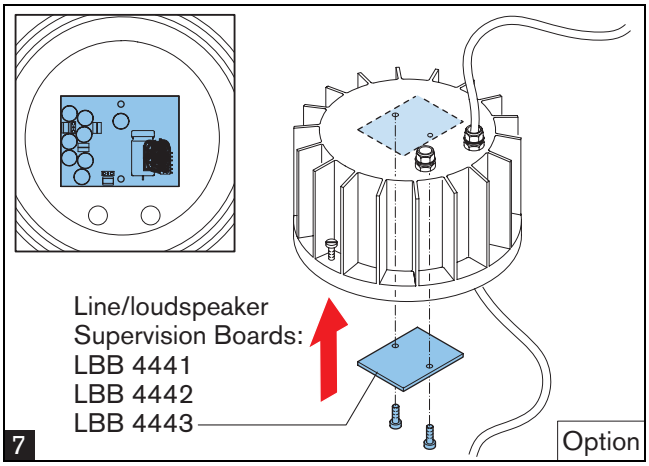
Line/loudspeaker
Supervision Boards:
LBB 4441
LBB 4442
LBB 4443
7
Option

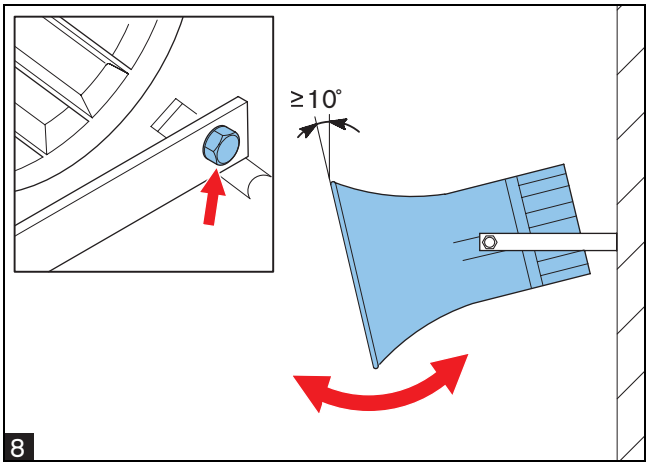
≥10°
8