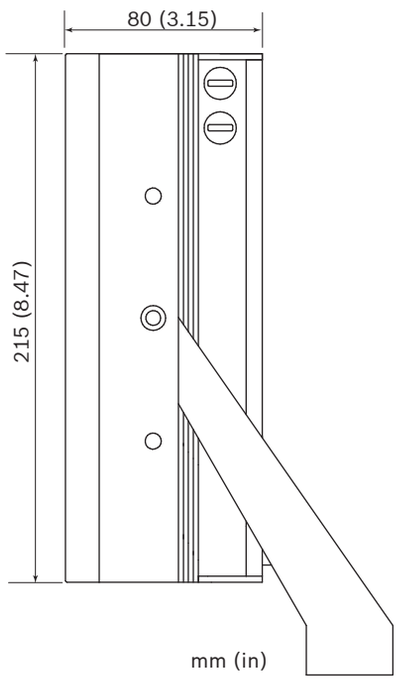
80 (3.15)
215 (8.47)
mm (in)

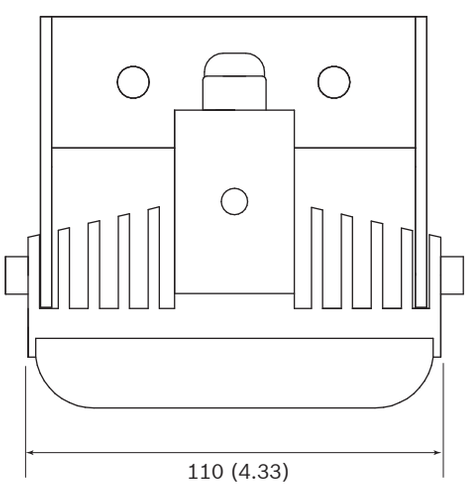
110 (4.33)